Collection:

Installation manual for:

LD6024 D12″ H4.5″ L2

Installation instructions:

1.Check all of the package contents before installation.
2. Install the mounting bracket (P1) to the outlet box using the screws (P2).
3. Connect the wire with L marking from the fixture to the BLACK wire from the Junction box.
4. Connect the wire with N marking from the fixture to the WHITE wire from the Junction box.
5.Loop the grounding wire(E wire) from the fixture under the head of the green ground screw on the mounting bracket(P1) and connect it to the grounding conductor from the supply circuit.
6.Adjust the angle of the fixture arms. Align the holes in the fixture with the mounting screws (P3) and secure it by screwing the ball nuts (P4).
7.Install Main lamp holder(P7)to the Canopy plat(P6）， then use Cap nut(P8) to screw tighten.
8.Put the Glass(P9) onto Main lamp holder(P7) and use Metal finial(P12) to screw tighten.
9.Install E12 light source,no include bulb.
10. Connect the power.

The end!

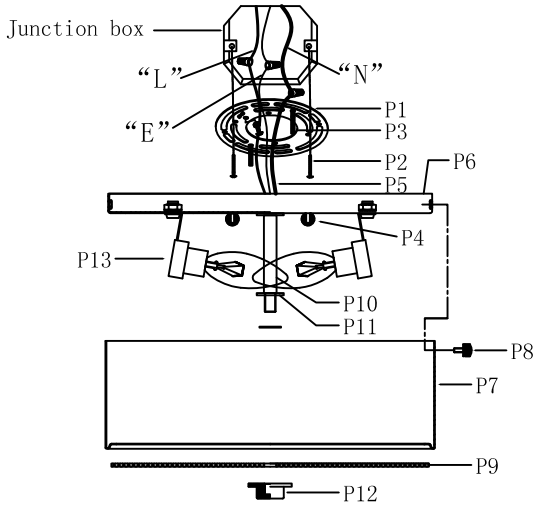

Front View

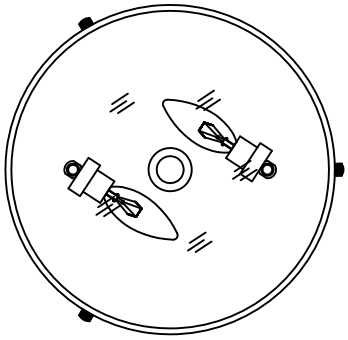

Plan View

″L″ = Hot wire
″N″ = Neutral wire
″E″ = Ground wire

PARTS LIST

part	picture	Description	Qty	Check list
P1		D4″ Mounting bracket	1	
P2		5/32-32 Screw	2	
P3		5/32-32 Screw	2	
P4		Ball Nut	2	
P5		Power Cord 1.3',18AWG, Black&White	1	
P6		D11.8″ Canopy plat	1	
P7		D12″ Main lamp holder	1	
P8		Cap nut	3	
P9		D11.57″ Glass	1	
P10		L2.83″ Rod	1	
P11		Washer	2	
P12		Metal Finial	1	
P13		E12 Socket	2	