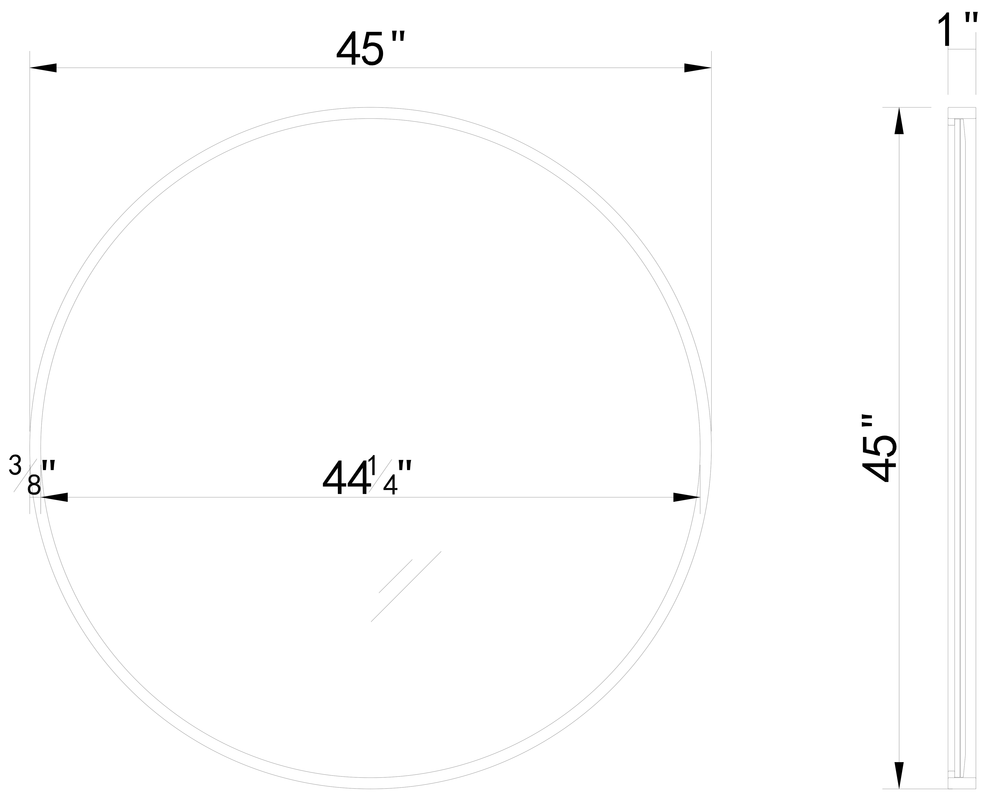

Front view

Side view

DWG. NO.

MODEL NO: MR4845S

SPEC NO:

QUANTITY:

DATE:

CHECKED BY:

FOR PROPOSAL ONLY ALL DIMENSIONS TO BE VERIDIED

PROJECT:

COLOR:

FINISH:

REVISIONS

1
2
3
4
5
6

ELEGANT FURNITURE & LIGHTING™

500-550 E. Erie Avenue
Philadelphia PA 19134
1-888-388-3390

Model #	MR4845S	Product Type	Mirror	Product Width (in)	45	Product Depth (in)	1	Product Height (in)	45
Mirror Width	44.25"	Mirror Depth	0.16"	Mirror Height	44.25"	Frame shape	Round	Orientation	Vertical and Horizontal
Frame finish	Silver	Frame material	Metal and MDF	Mounting / attachment type	Metal Inset hanger	Number of brackets	1	Beveled glass	Yes
Frameless	No	Package LENGTH	48.54	Packaged WIDTH	48.54	Packaged HEIGHT	3.15	Package Weight	38.91
Product weight	31.68	Shipment Type	Small Parcel						

DWG. NO.

MODEL NO: MR4845S

SPEC NO:

QUANTITY:

DATE:

CHECKED BY:

FOR PROPOSAL ONLY ALL DIMENSIONS TO BE VERIDIED

PROJECT:

COLOR:

FINISH:

REVISIONS

1
2
3
4
5
6

ELEGANT FURNITURE & LIGHTING™

500-550 E. Erie Avenue
Philadelphia PA 19134
1-888-388-3390