hansgrohe

Rainfinity
Handshower Set 130 3-Jet PowderRain, 1.75 GPM
Finishes : **chrome** Part no. : **26914001**

Description

Features

- Consists of: Handshower, Handshower holder, Handshower hose
- Spray modes: PowderRain, Intense PowderRain, Intense Turbo
- Select button for comfortable alternation of spray modes
- Flow: 1.75 GPM (6.6 L/Min)
- wall supports of metal

Item details

List Price $ 295.00

Technology

Select

Quick Clean

Design awards

German Design Award Winner 2020

Icono Awards Innovative Architecture best of best

iF Gold Award 2019

reddot award 2019
best of the best

Compliance

UPC

Product image

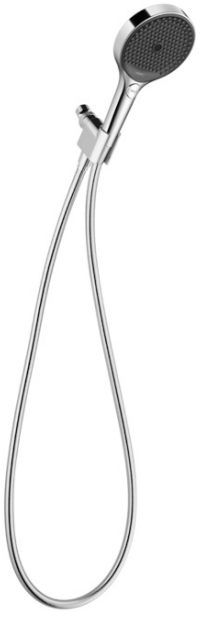
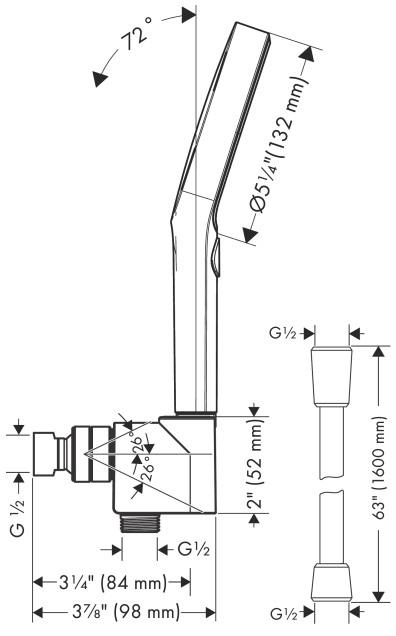
Scale drawing