MADE IN THE U.S.A.

JASON HYDROTHERAPY
8328 MacArthur Dr. • North Little Rock, AR 72118
501.771.4477 • Fax: 501.771.2333
Customer Service: 800.255.5766
www.jasoninternational.com

Designer Collection Specifications

VL5535

MicroSilk®- AirMasseur®

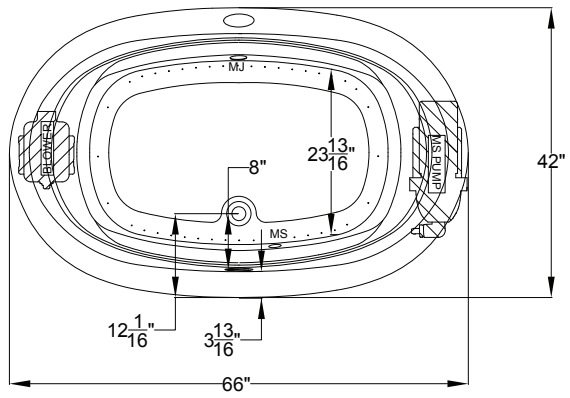

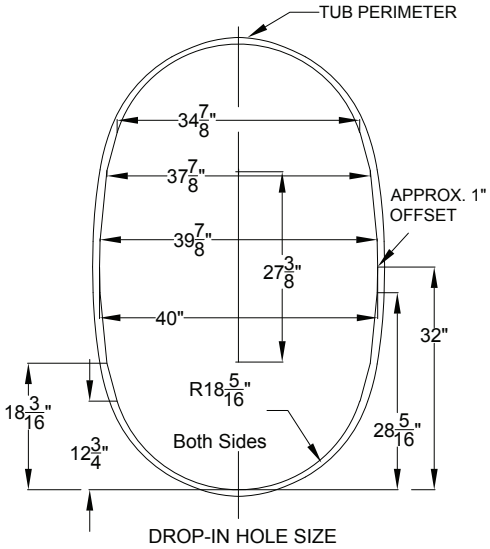

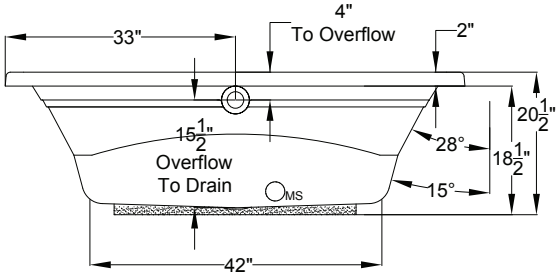

Note: MicroSilk equipment may extend beyond the outside perimeter of the bath. Consult factory for details.

Patents recieved or pending.

Note: Dimensional Tolerances: ±1/4"

Drop-in-Hole Size:	See Diagram
Operating Capacity:	43 Gal.
Overflow Capacity:	70 Gal.
Floor Loading / sq.ft.:	46.6 lbs.
Carton Weight:	144 lbs.
Cube:	39.7 $ft.^3$

Construction: Fiberglass reinforced acrylic bath with Level Form™ full-support base.

We provide products listed with Intertek ETL SEMKO (Edison Testing Laboratories) U.S. and Canadian and with International Association of Plumbing and Mechanical Officials (IAPMO). Consult factory with your listing requirements.

Standard

A 120V system that includes a MicroSilk® unit; a 1HP, variable speed air blower with integral air heater; automatic purge cycle; an electronic control that operated the MicroSilk® unit, blower, and blower speed for continuous, pulse or wave massage modes; and a 20-minute timer.

Premier

A 120V system that includes a MicroSilk® unit; a 1HP, variable speed air blower with integral air heater; automatic purge cycle; (2) Chromatherapy mood lights; Automatic Ozone System; an electronic control that operates the MicroSilk® Unit, blower and blower speed for continuous, pulse or wave massage modes; and a 20-minute timer.

Signature

A 120V system that includes a MicroSilk® unit; a 1HP, variable speed air blower with integral air heater; automatic purge cycle; (2) Chromatherapy mood lights; Automatic Ozone System; a digital control with LCD display; low water level and temperature sensors; enhanced user control options; a 20-minute timer; and Bluetooth Sound Immersion System. Control keypad operates the MicroSilk® unit, blower and blower speed for continuous, pulse or wave massage modes, LED Chromatherapy lights and shows MicroSilk® status, blower speed, water temperature and time remaining.

Copyright © 2019 Jason International. Designer Collection