4F032WHSC

Specifications

Features

- Flow rate: 2.5/1.8 gpm

3 FUNCTION SHOWER HEAD WITH 8" SHOWER ARM & FLANGE

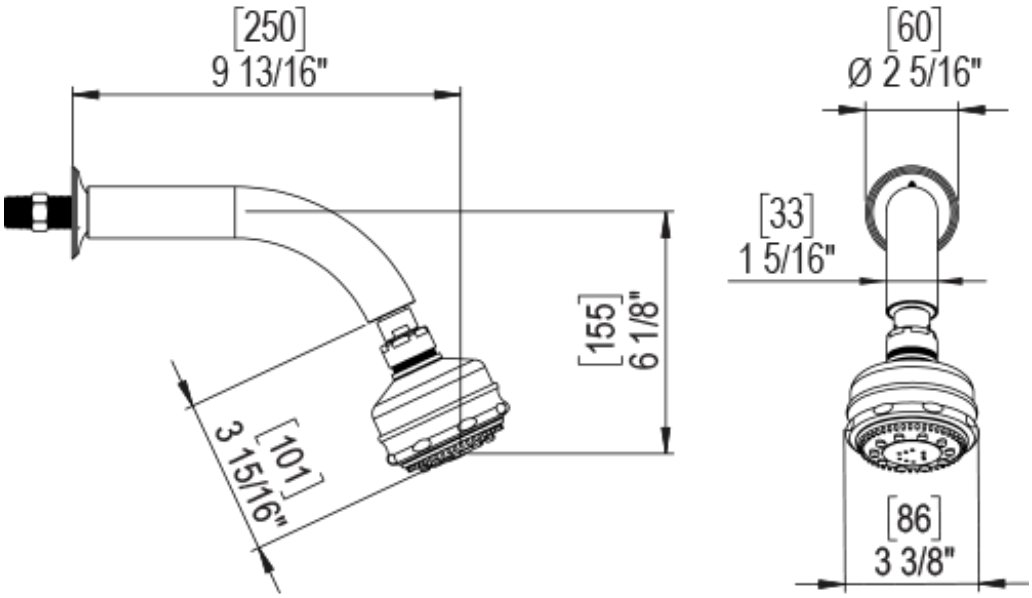

Tel: 905-851-6780
Fax: 905-851-8031
Toll Free: 800-461-5901